Gustave

Superlites



Mounting Table
Enviroment Indoor Outdoor wet location
LED2.5W
159lms
2700k
CRI:90
IP54
Class III
Dimmable Yes
Charging max power 1
ACharging socket/connector
USB-CLength: 155mm
Cord colour Black
Cord length: 1200mm
Colour: Lacquered Brown, Lacquered Green, Matt Anthracite, Matt White, Polished Silver, Raw Aluminium, Titan Blue

0207 924 2055
sales@superlites.co.uk
www.superlites.co.uk

SJHL

Gustave

Superlites

Gustave is a portable, self-powered luminaire, specially designed for tabletop lighting applications and other related uses as supplementary lighting.

Gustave's compact size encloses a perfect mix of the most innovative optical and light technology and a disruptive engineering, developed in the service of a discretionary purpose of Flos for this project: to create the first portable luminaire on the market with circular design awareness, ecological and honestly conceived against obsolescence

Portable luminaire with autonomous battery, designed for residential applications.
Powered by 'Button Type 18650 Li-Ion' batteries (2 units, included inside the product).
USB-C charging cable (plug adapter not included).
0-100% sequential regulation by means of capacitive haptic push button.

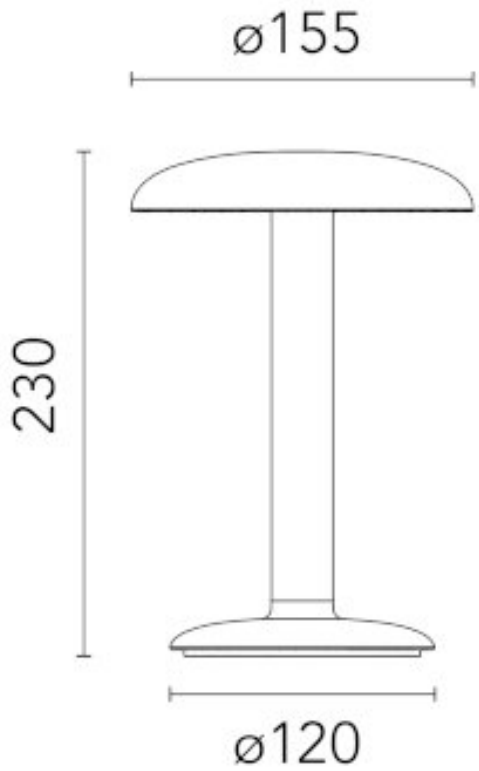

0207 924 2055
sales@superlites.co.uk
www.superlites.co.uk